Rating	30A
Contact Resistance	DC 500V 100M ohm Min
Insulation Resistance	AC 1500V 1 minute
Color	Red

Material:
Plug: brass with nickel plated.
Handle: PVC.
Fitsϕ4mm banana plug or O.D . less ϕ4mm wire by soldering, please cut the end of PVC handle to fit wire's diameter.
Fits ϕ4mm standard banana socket.
RoHS compliance.

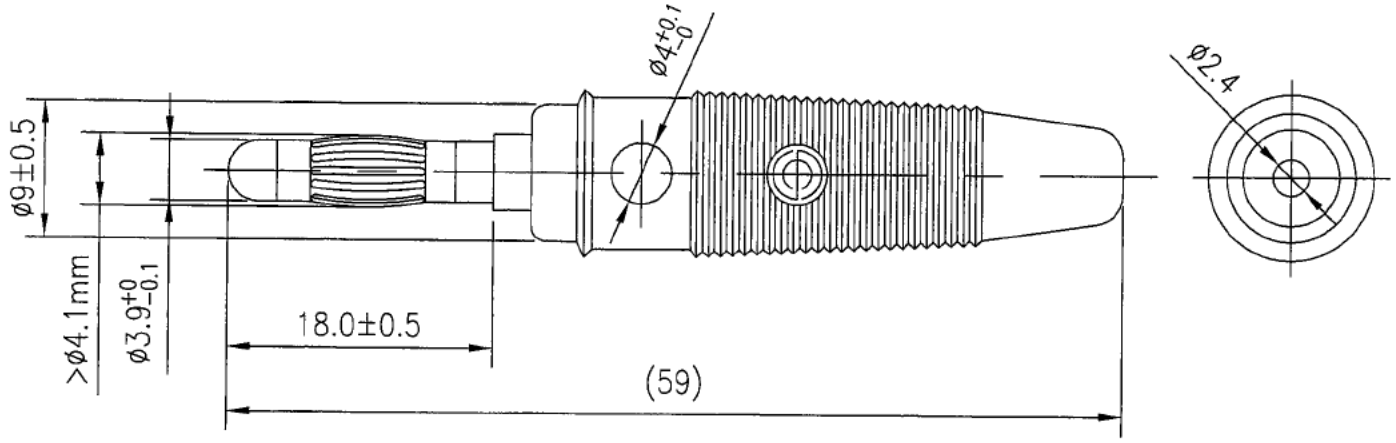

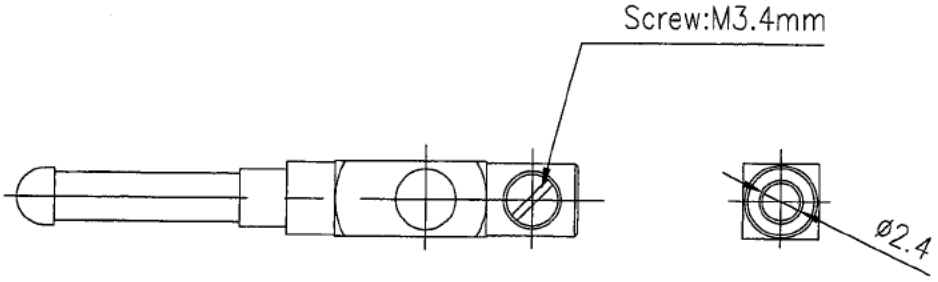

原稿
2020.5.07
研發部

△1 * Production in the outsourcing plant
(外購轉廠內製作)

TOLERANCE:±0.3mm UNLESS OTHERWISE SPECIFICED.

							△
							△
4/21/'20	林玥呈	外購轉廠內製作					△1
Date	Name	Description					No.
Drawn	Checked	Approved	SCI BOM No.	1540093	Model Name	Banana Pulgs	
林玥呈	許庭瑛	黎明	Customer No.				Rev.
4/21/'20	4/23/'20	4/24/'20	Unit	mm			1