LCDP25B2

Installation Instruction

LED/LCD/PLASMA
FULL-MOTION WALL MOUNT

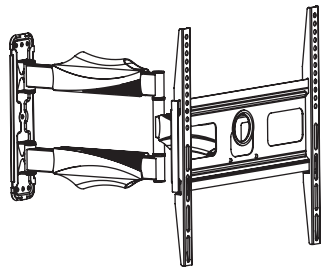

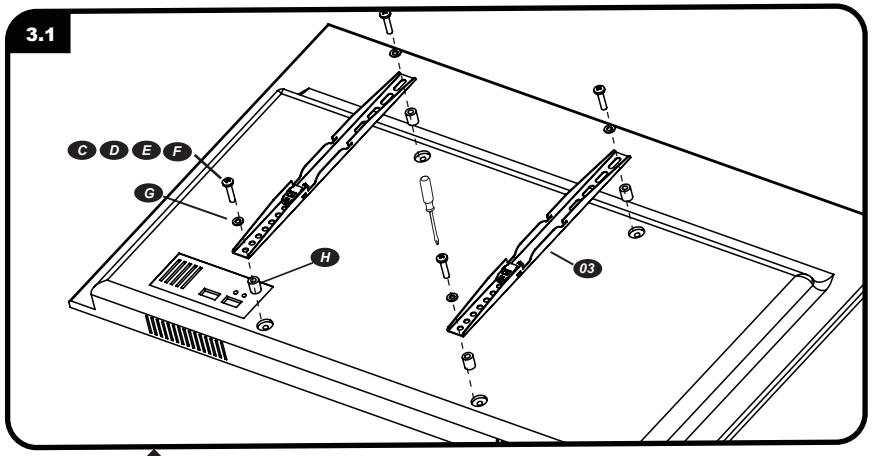

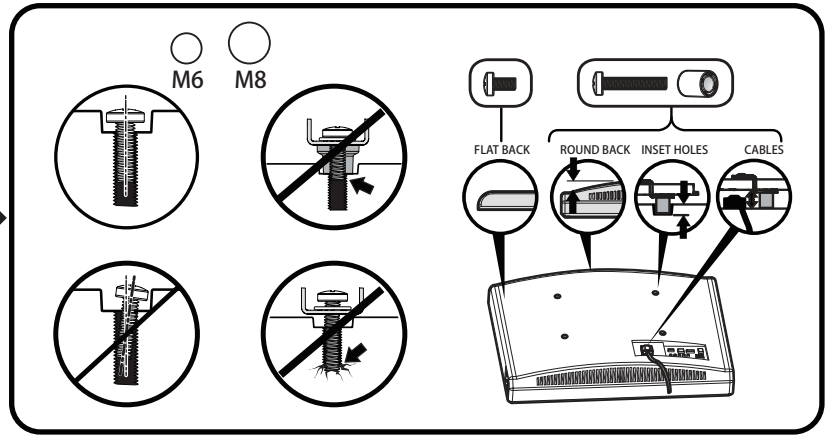

3
Attach bracket to TV

4
Hang TV on wall mount

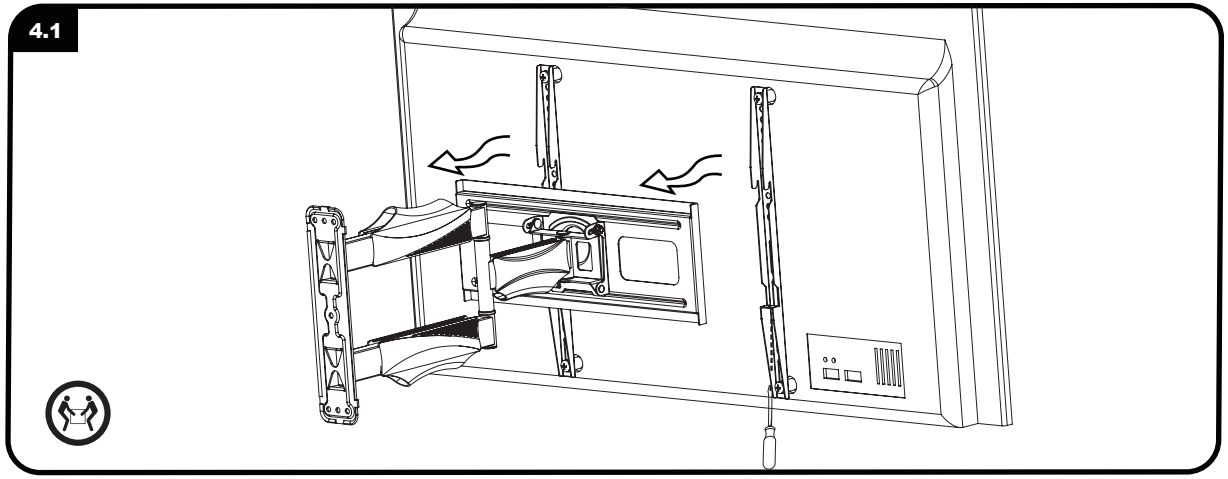

Adjusting TV

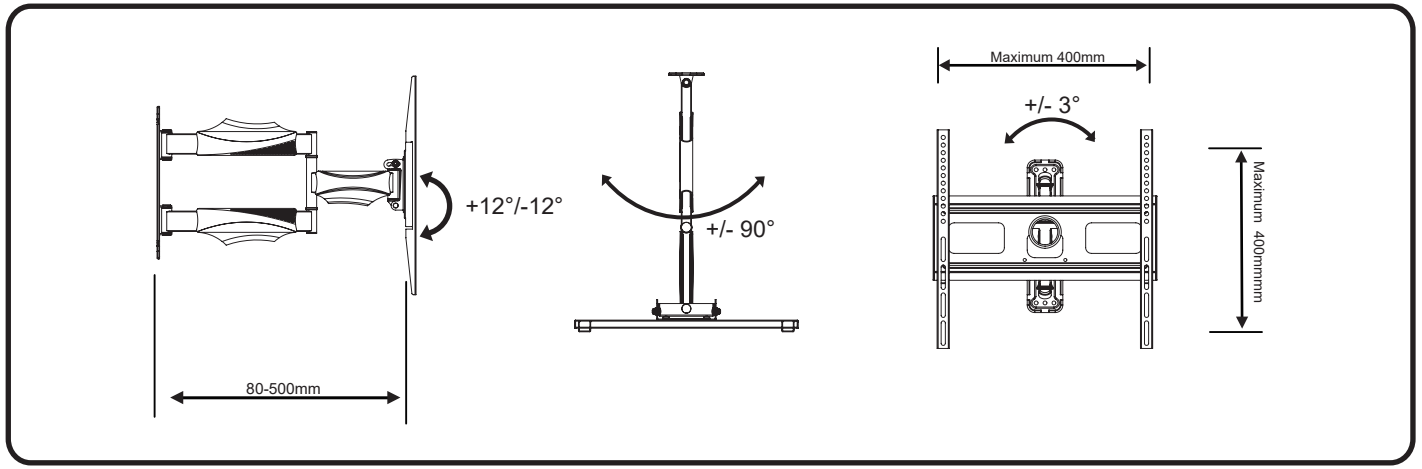

IMPORTANT
SAFETY INSTRUCTOPNS

Please read through these instructions completely to be sure you're comfortable with this easy install process. Also check your TV owner's manual to see if there are any special requirements for mounting your TV. If you do not understand these instructions or have doubts about the safety of the installation, assembly or use of this product, contact your Customer Service.

⚠ **CAUTION**: Avoid potential personal injuries and property damage!

- This product is designed for use in solid concrete, and concrete block walls - DO NOT install into drywall alone!!
- The wall must be capable of supporting five times the weight of the TV and mount combined.
- Do not use this product for any purpose not explicitly specified by manufacturer.
- Manufacturer is not responsible for damage or injury caused by incorrect assembly or use.
- This wall mount is intended for use with television that does not exceed the maximum weight capacity designated. Using this mount with products heavier than the maximum weight indicated may result in instability causing possible injury.

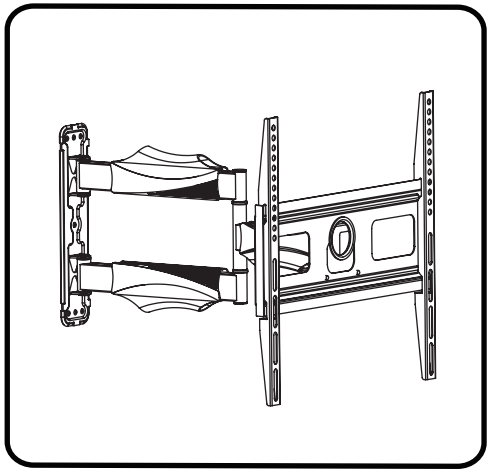

1
preparation

Parts for assembly

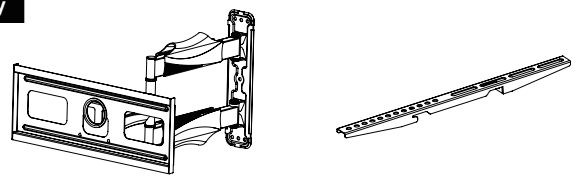

01 Wall plate x1

02 Bracket x2

Hardware

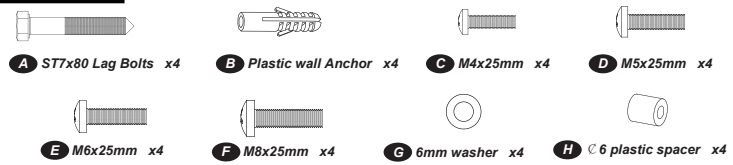

A ST7x80 Lag Bolts x4

B Plastic wall Anchor x4

C M4x25mm x4

D M5x25mm x4

E M6x25mm x4

F M8x25mm x4

G 6mm washer x4

H ℄ 6 plastic spacer x4

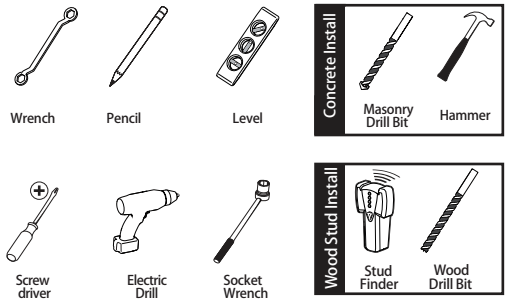

Tools required

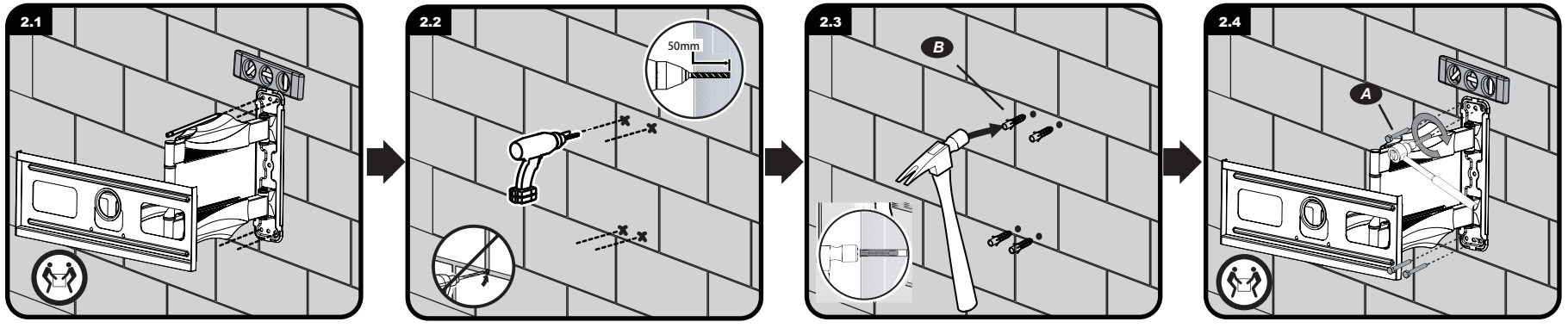

2
Attach mount to wall (Solid Concrete wall)

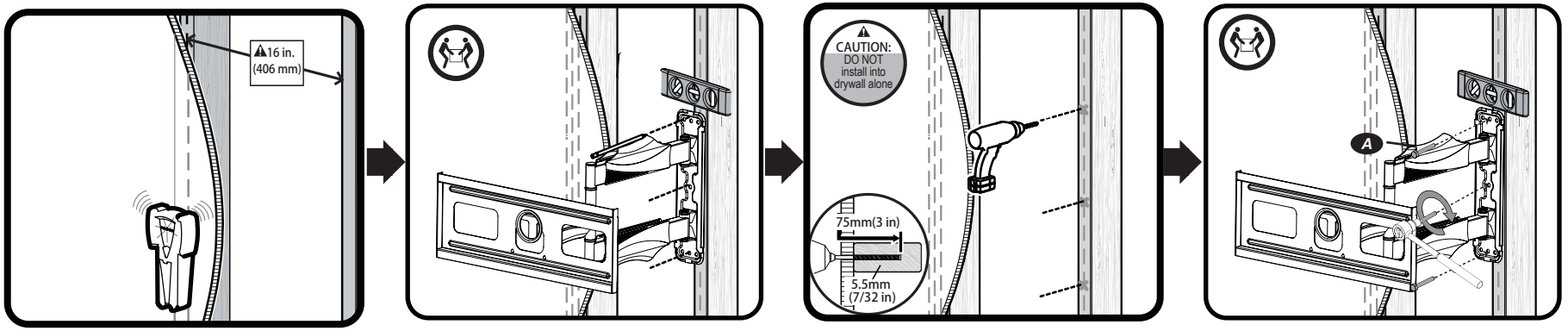

Attach mount to wall (Wood Stud wall)