# Instruction of LCDP15B2 Wall fixed installation

1.Product Features

AG 015 Product weight:0.7kg; TV size support:32-42";
Distance to the wall:15mm; Maximum load:40kg;
For VESA standard: 400x400mm

2.Hardware List

Important: We are not responsible for any personal injury or product damage due to mishandling, incorrect mounting, incorrect assembly or incorrect use of this product.

Note: The supplied wall mounting hardware is not for use on steel stud walls or cold cinder black walls. If you are uncertain what material your wall is constructed of or any question regarding the proper installation of this wall mount, contact a qualified contractor. If the hardware required is not including, please contact your local hardware store.

Caution: This LCD/Plasma wall mount is intended for use with television that does not exceed the maximum weight capacity designated. Using this mount with products heavier than the maximum weight indicated may result in instability

Screw spare parts list

| No. | Description | Specifications Model | Qty. |
|---|---|---|---|
| 1 |  | Wall plate | x1 |
| 2 |  | Arm | x2 |
| 3 |  | Plastic tie rod | x2 |
| A |  | M5.3x40mm Wallboard screw | x4 |
| B |  | M8 Plastic screw | x4 |
| C |  | M6x20mm Cross round screw | x4 |
| D |  | M8x16mm Cross round screw | x4 |
| E |  | Φ6plastic spacer | x4 |
| F |  | Φ6 washer | x4 |

Instruction of installation operation

## 1

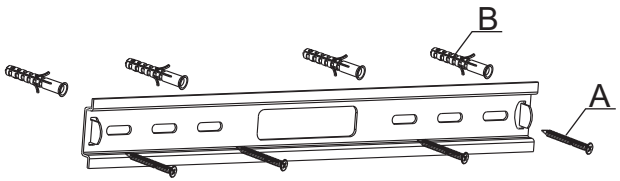


Using the bubble level to ensure the wall plate is level, Pre-drill 4 holes with a 10mm bit to 50mm deep.Insert wall anchors into the holes,then using long bolts to mount the wall to studs.

## 2

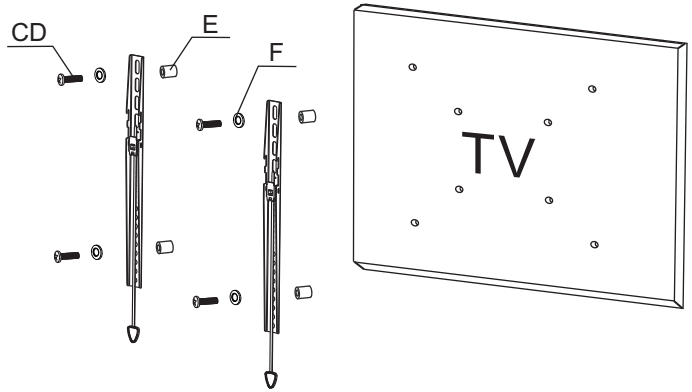


Using Long bolt(CorD), washer(F) and plstic spacer(E) to mount TV set to the aluminum siding .

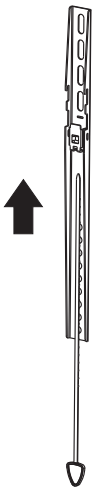

## 3

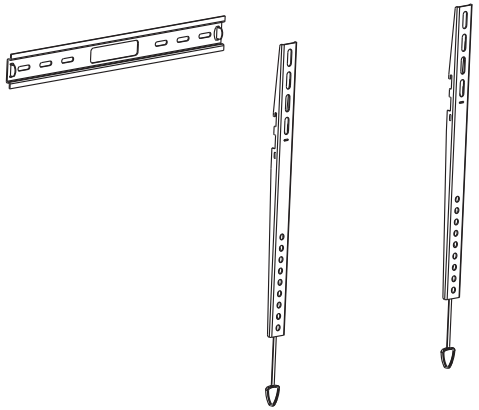

## 4

