Instruction of LCDCM2B2 Wall fixed installation

1.Product Features
JT3220B-L Product weight:3.6kg; TV size support:32-55”; Distance to the wall: 650-950mm; Maximum load:40kg; For VESA standard: 400x400mm

2.Hardware List
Important: We are not responsible for any personal injury or product damage due to mishandling, incorrect mounting, incorrect assembly or incorrect use of this product.
Note: The supplied wall mounting hardware is not for use on steel stud walls or cold cinder black walls. If you are uncertain what material your wall is constructed of or any question regarding the proper installation of this wall mount, contact a qualified contractor. If the hardware required is not including, please contact your local hardware store.
Caution: This LCD/Plasma wall mount is intended for use with television that does not exceed the maximum weight capacity designated. Using this mount with products heavier than the maximum weight indicated may result in instability causing possible injury.

Screw spare parts list

No.	Description	Specifications Model	Qty.
1	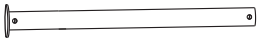	Join arm-1	x1
2		Wall plate	x1
3	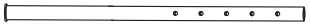	Join arm-2	x1
4		plastic cover	x1
5		plate	x1
6	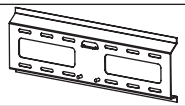	plate2	x1
7	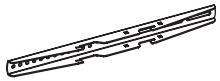	Bracket arm	X2
8		Locking bar	X1

A		M8 Plastic screw	x4
B		M5.3x40mm Wallboard screw	x4
C		M4x5mm Wood screw	x1
D		M8x45mm Cross round screw	x1
E		M8 Screw nut	x1
F		Φ8 Iron washer	x5
G		M8x16mm Cross round screw	x4
H	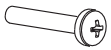	M6x20mm Cross round screw	x4
I		Φ6plastic spacer	x4
J		Φ6x16 washer	x8
K		M6 nut	x2
L		Wrench	x1

Instruction of installation operation

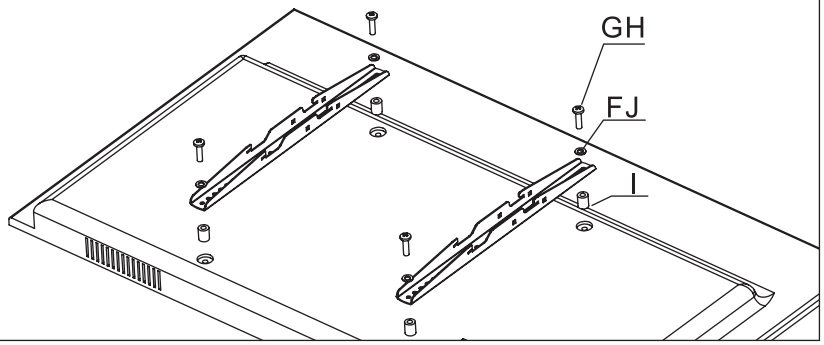

1

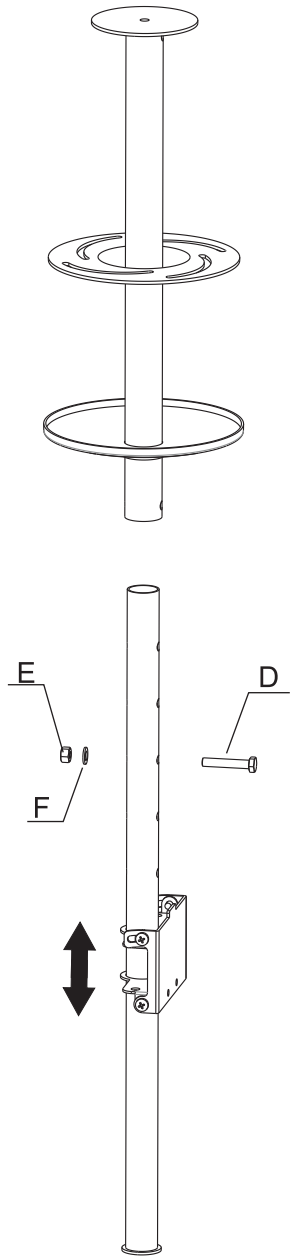

Put the wall plate on the join arm-1 and then do the same to the plastic cover.

Using cross round screw (D) and washer(F)screw nut (E) to joint the join arm-1 and join arm-2.

2

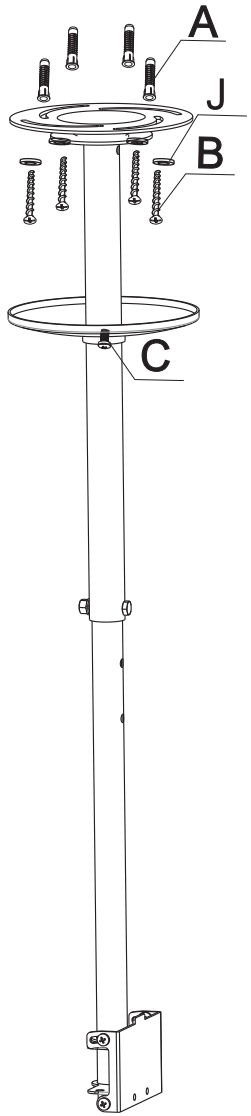

Using the bubble level to ensure the wall plate is level, Pre-drill 4 holes with a 10mm bit to 50mm deep.Insert wall anchors into the holes,then using long bolts to mount the wall to studs.

3

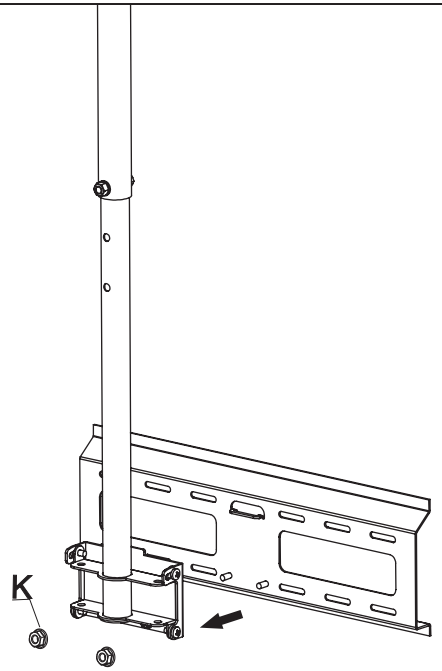

4

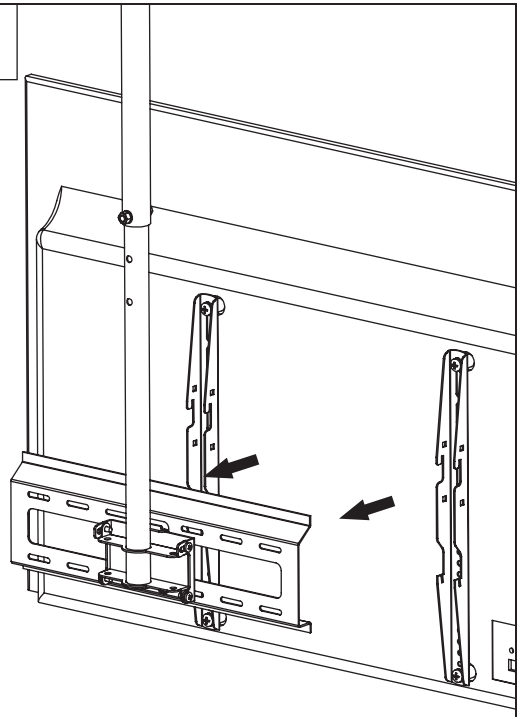

5

