Instruction of LCD06AB2 Wall fixed installation

1.Product Features
DB008 Product weight:0.47kg; TV size support:14-37"; Distance to the wall: 2.5mm; Maximum load:15kg; For VESA standard:200x200mm
2.Hardware List
Important: We are not responsible for any personal injury or product damage due to mishandling, incorrect mounting, incorrect assembly or incorrect use of this product.
Note: The supplied wall mounting hardware is not for use on steel stud walls or cold cinder black walls. If you are uncertain what material your wall is constructed of or any question regarding the proper installation of this wall mount, contact a qualified contractor. If the hardware required is not including, please contact your local hardware store.
Caution: This LCD/Plasma wall mount is intended for use with television that does not exceed the maximum weight capacity designated. Using this mount with products heavier than the maximum weight indicated may result in instability causing possible injury.

Screw spare parts list

No.	Description	Specifications Model	Qty.
1	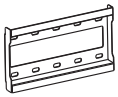	Wall plate	x1
2		Arm	x2
A		M5.3x40mm Wallboard screw	x4
B		M8 Plastic screw	x4
C		M8x16mm Cross round screw	x4
D		M6x20mm Cross round screw	x4
E		Φ6plastic spacer	x4
F		Φ6x16 washer	x8
G		Φ8 washer	x4
H		M5x30mm Cross round screw	x2

Instruction of installation operation

1

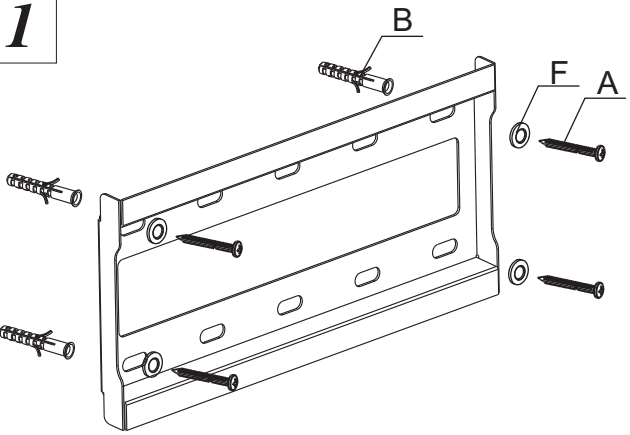

Using the bubble level to ensure the wall plate is level, Pre-drill 4 holes with a 10mm bit to 50mm deep.Insert wall anchors into the holes,then using long bolts to mount the wall to studs.

2

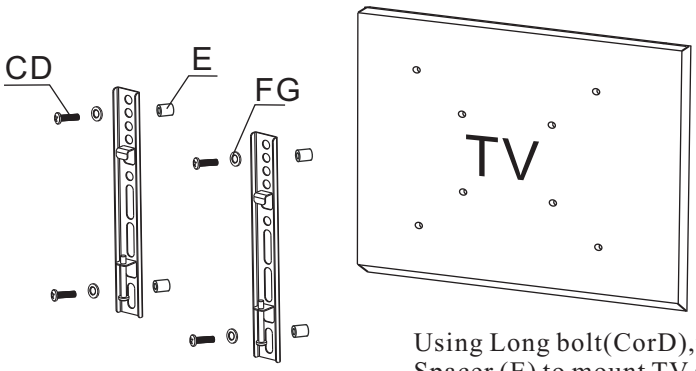

Using Long bolt(CorD),washer(ForG)and Spacer (E) to mount TV set to the aluminum siding.

3

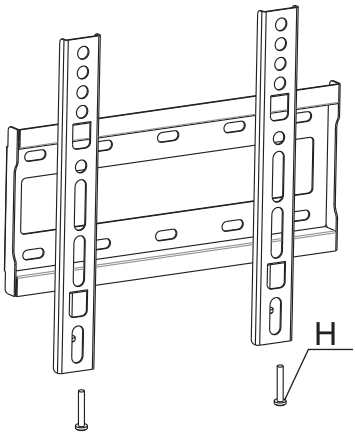

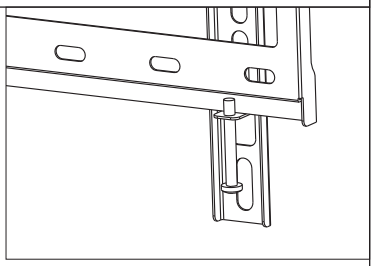

Hang the TV & arms on the mount
Set the bar into the slot